# Understanding Automatic Tank Gauging Systems

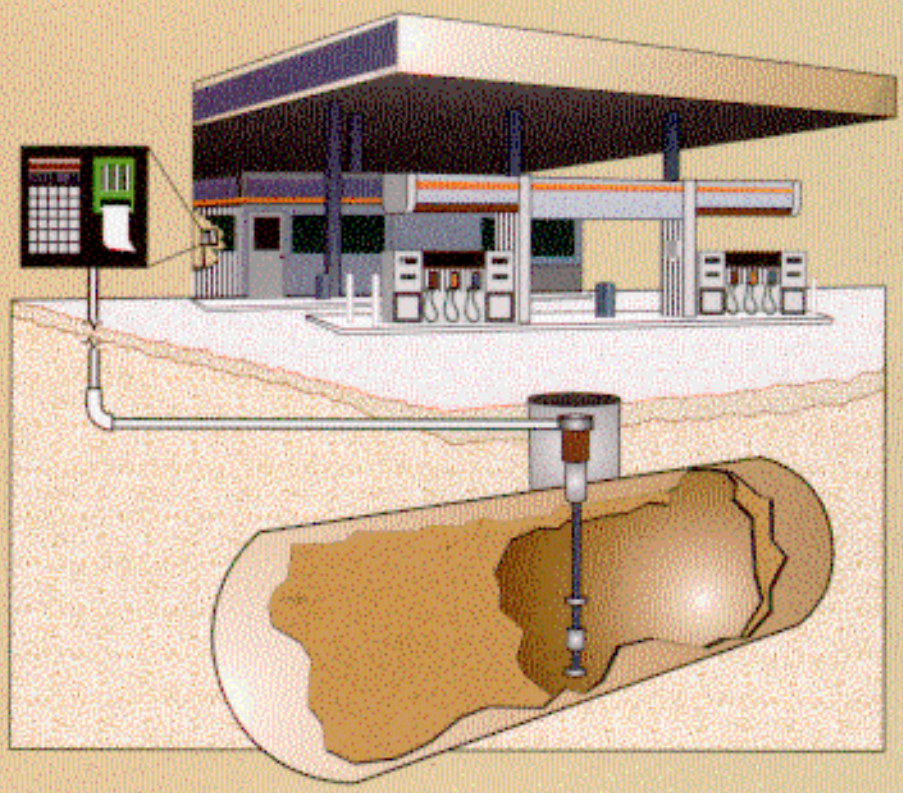

November 1996

State Water Resources Control Board

California Environmental Protection Agency

This booklet contains information about automatic tank gauging systems. Although the booklet is intended primarily to assist local agency inspectors, tank owners and operators, consultants, and contractors may also find this information useful.

The regulatory requirements referred to in this booklet are in the California Code of Regulations Title 23, Division 3, Chapter 16. To obtain copies of these regulations or additional copies of this booklet, please fax your request to the **State Water Resources Control Board, UST Program, at (916) 227-4349** or call (916) 227-4303. Faxed requests are preferred.

We would like to thank Marcel Moreau and Thompson Publishing Company for allowing us to use portions of an article written by Mr. Moreau entitled, "Insight: Automatic Tank Gauge." We would also like to thank the automatic tank gauge manufacturers and local implementing agencies who reviewed drafts and provided valuable information for the preparation of this document.

Any reference to or depiction of commercial products is solely for explanatory purposes and is not intended as an endorsement.

**State of California**
*Pete Wilson, Governor*

**California Environmental Protection Agency**
*James M. Strock, Secretary*

**State Water Resources Control Board**
P.O. Box 100
Sacramento, CA 95812-0100

*John Caffrey, Chair*
*John W. Brown, Vice Chair*
*Marc Del Piero, Member*
*James M. Stubchaer, Member*
*Mary Jane Foster, Member*

*Walt Pettit, Executive Director*
*Dale Claypoole, Chief Deputy Director*

YOU CAN ACCESS THE INFO BY PLACING THE POINTER ON THE SUBJECT AND CLICK.

# CONTENTS


- Introduction ..... 1
  - What are the components of an ATG system?
  - What is the difference between various ATG modes?
  - What kind of information do ATGs provide?
  - Do ATGs signal problems?
  - Can ATGs monitor other UST components?

- Installation Overview ..... 6

- Modes of Operation ..... 8
  - Leak detection mode
  - Inventory mode

- Leak Detection and Regulatory Requirements ..... 11
  - Leak Rates, Probabilities, and Leak Thresholds
  - Leak Test Reports
  - Product Level Limitations
  - Recording and Reporting
  - Calibration, Maintenance, and Repair
  - Leak Detection Equipment List

- Inspecting ATGs ..... 20

- Advances in ATG Technology ..... 21
  - Continuous Automatic Tank Gauges (CATGs)

- Answers to Common Questions ..... 24

Appendices

A Technical Overview of ATG Probes ..... Appendix A

ATG System Inspection Checklist ..... Appendix B

ATG Annual Maintenance Checklist
- Magnetostrictive and Ultrasonic Probes ..... Appendix C1
- Mass Buoyancy Probes ..... Appendix C2

Technical Representatives ..... Appendix D

References ..... Appendix E

# INTRODUCTION

Automatic tank gauges (ATGs) are electronic devices installed in underground storage tanks (USTs). Most of these devices can automatically read and record the temperature and amount of product in a tank. They can also monitor how much water is at the bottom of a tank.

Except for some older models (early to mid 1980's), ATGs can determine whether a tank is leaking by performing periodic leak tests. Periodic tests are conducted during extended periods (4-8 hours) in which the tank is inactive. Some of the newer, more sophisticated ATGs go beyond the traditional periodic leak test technology and are equipped with a special software program for operating in a continuous leak test mode. In the continuous leak test mode, the tank does not usually need to be taken out of service (customers can still pump gas) in order to perform a leak test.

When installed and operated according to the manufacturer's instructions and regulatory requirements, ATGs can provide stand-alone leak detection compliance for owners of single-walled tanks (no annual tank testing or other monitoring is required). When ATGs are connected to other sensors they can also provide leak detection compliance for other UST components such as piping and sumps.

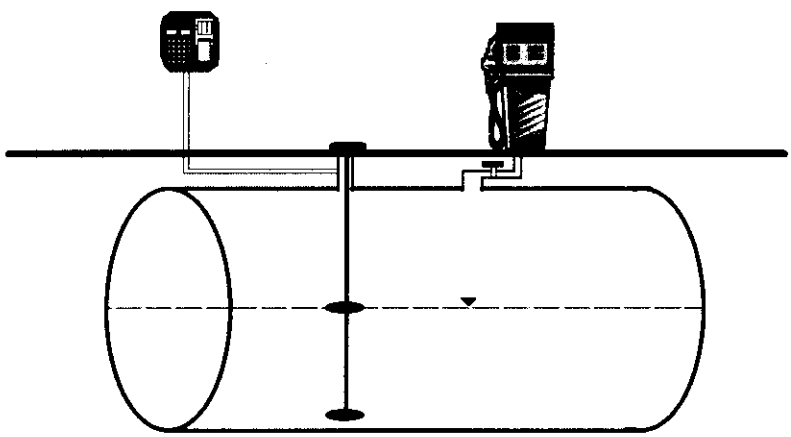

## What are the components of an ATG system?

All ATG systems consist of three major components:

A tank probe: This is a measuring device installed in the tank to collect information, such as product level and temperature. Several tanks can have probes operated from one control panel.

A control panel: An electronic panel which contains a microprocessor that communicates with the probe in each tank as well as any other sensors connected to it. The microprocessor collects the information from the probes, then interprets and analyzes it.

An on-site or remote printer or computer terminal, audible/visual alarm, or display monitor: These devices communicate the findings of the microprocessor to the tank owner or operator.

## What is the difference between various ATG models?

The main difference between various ATG models is the probe technology. Refer to Appendix A for a technical overview of various probe types (magnetostrictive, ultrasonic, capacitance, and buoyancy) and the fundamental physical principles for their operation. ATGs also differ in the following areas:

- Data analysis software.
- Ability to process information from line leak detectors, sump sensors, interstitial sensors, dispenser pan sensors, vapor sensors, and liquid sensors.
- Number of tanks or sensors that can be connected to one control panel.
- Tank and inventory management features.
- Ability to communicate with a cash register and/or dispenser to obtain volume of product sold.
- On-site and remote printer and communication capabilities.

## *What kind of information do ATGs provide?*

Most newer models can provide the following information regarding the status and integrity of the tank:

1. **Gross Volume** - Volume of product in the tank based on the product depth and the tank's depth-to-volume conversion factor.

2. **Product Temperature** - The average temperature of product in the tank.

3. **Net Volume** - Temperature-compensated volume of product (the volume of the product calculated as if the product were at 60° Fahrenheit).

4. **Water Depth** - The depth of water in the tank in inches.

5. **Product Depth** - The depth of product in the tank in inches.

6. **Water Volume** - The volume of water in the tank calculated from the measured depth of water and the tank's depth-to-volume conversion factor.

7. **Ullage Volume** - The capacity of the tank minus the gross volume of product. The ullage is the empty space within a tank above the product level.

8. **Net Delivered Product Volume** - Automatic calculation of delivery volume based on before and after product level and temperature measurements. This volume is temperature-compensated to 60°F.

9. **Leak Test Results** - The results of the last leak test. The result of a leak test may be a pass, fail, inconclusive, test aborted, etc.

## *Do ATGs signal problems?*

Yes. ATGs can be programmed to send audible/visual alarms when various problems exist. These alarms provide an additional safeguard against unauthorized releases. Most of the newer model ATG systems have the following alarms:

1. **High Product-Level Alarm:** Activated when the product level exceeds a high-level set point (usually set at 90% or 95% level). It may help prevent overfills when the ATG is connected to an external alarm that notifies the delivery person that the tank is nearly full (overfill alarm).

2. **Low Product-Level Alarm:** Activated when the product level is below a low-level set point. It is used to notify the operator that inventory is low and a delivery is needed.

3. **High-Water Alarm:** Activated when the amount of water in the tank exceeds the programmed maximum amount. All ATG systems must detect the presence of water in the tank because the ingress of water (often in areas of high ground water) could indicate a leak. Although the cause for this alarm should be investigated carefully, condensation or entry through the fill pipe could also explain the accumulation of water in the tank.

4. **Theft Alarm:** Activated if product level drops significantly when the facility is not operating. A theft or catastrophic leak can activate this type of alarm.

5. **Leak Test Alarm:** Activated when a leak test indicates a leak or when the system has not been able to perform a leak test during a pre-specified time frame (for example: there have been no leak tests during the previous 28 to 30 days).

## *Can ATGs monitor other UST components?*

Yes. Most newer ATG control panels can be connected to the following components of a UST system:

1. **External Sensors:** A wide variety of liquid and vapor sensors can be connected to the ATG control panel to monitor piping sumps, secondary dispenser containment, interstitial space between primary and secondary tank containment, vapor wells, and groundwater monitoring wells.

2. **Line Leak Detectors:** By themselves, ATGs provide leak detection for the tank only. Additional hardware can be added to the product line to comply with leak detection requirements for pressurized piping. The line leak detection hardware can operate independently or be connected to the ATG control panel. In the latter case, the ATG can print line leak test reports and trigger an alarm and pump shut-off when a leak is detected.

3. **Communications:** ATG consoles can be equipped with modems for remote communication capabilities, ports for communication with point-of-sale systems to integrate sales and inventory data, and automatic dialers to alert off-site personnel of conditions at a facility.

# INSTALLATION OVERVIEW

The installation of an ATG system requires equipping each tank with a probe that is connected via wiring to a console located in a nearby building. Once the probe is inserted into the tank through a dedicated fitting on top of the tank, the wiring is installed underground for safety purposes. Other general installation considerations are as follows:

- All electronic ATGs should be UL listed.
- The power supply to an ATG should be on a tamper-proof, dedicated circuit of appropriate amperage.
- National electrical codes require that all wiring be installed in appropriate conduit unless direct burial cable is used.
- The ATG should employ a "closed-loop" circuitry such that electrical discontinuities (wiring, probes, etc.) will signal an audible and visible alarm.
- Visual alarms should not be capable of being re-set by the operator. They should only be reset by a factory-authorized service representative or when the alarm condition itself is abated.

Failure to correctly install ATG wiring may void the manufacturer's warranty and may cause a fire or explosion.

The console contains a microprocessor which automatically converts the product level into product volume so that *volumetric* data can be analyzed and recorded. The console has a keyboard for programming and a visual display for presenting results. In addition, the console is able to generate leak test reports, inventory reports, delivery reports, and alarm reports. ATGs can also be linked with computers on-site or off-site from which the ATG system can be programmed or interrogated.

**The automatic tank gauge conduit must be installed to meet the National Electric Code for Class 1, Division 1, Group C and D locations. This conduit must be rigid steel and isolated from the outer environment. The ATG wiring must not be installed in pre-existing conduit with other wiring.**

Once the console is installed, it is programmed with site-specific information such as the number of tanks, tank size and dimension, tank tilt, and the type of product in each tank. The accurate programming of this information is a crucial step for the proper functioning of the system. Information such as the depth-to-volume conversion factor and coefficient of thermal expansion must be accurate for the system to function properly. The coefficient of thermal expansion of a liquid is a value that correlates changes in liquid volume caused by changes in temperature. Therefore, it is important that the ATG manufacturer or distributor be consulted when there are changes to the fuel stored in the tank to determine if the coefficient of thermal expansion needs to be re-programmed.

**The tank owner/operator must receive approval from the local implementing agency before installing an ATG system.**

**The tank depth-to-volume conversion factors can be obtained by:**

- **interpolating from the tank manufacturer's chart**
- **calculating a theoretical ratio from tank geometry**
- **observing actual level changes when known volume is added or removed.**

# MODES OF OPERATION

The ATG system can operate in two modes: leak test mode or inventory mode. While the inventory mode provides information relating to the business aspect of fuel management, the leak detection mode tests for unexplained losses or gains caused by holes or other defects in the tank. Both modes of operation share the same equipment, and the ATG system remains in one of the two modes while in operation. The ATG systems can be set manually or automatically to perform a leak test.

ATG systems that are equipped with the continuous leak analysis software are known as Continuous Automatic Tank Gauging (CATG) systems . CATGs collect inventory information continuously while providing a leak test result as soon as they have enough quiet-time data to determine whether the tank is tight. CATGs are discussed on page 22.

GAS STOP
111 TANK ST.
WINTERS, CA 95694
7/25/91 02:09 PM
INVENTORY REPORT

TANK NO. 1 8000 GAL UNLEADED REG

| | |
|---|---|
| GROSS | 5050.7 GAL |
| NET | 5019.7 GAL |
| PROD LEVEL | 55.918 GAL |
| ULLAGE | 2933.4 GAL |
| TEMPERATURE | 67.606 F |
| WATER LEVEL | 0.583 |
| WATER VOL | 6.1 GAL |

GAS STOP
111 TANK ST.
WINTERS, CA 95694
7/25/91 02:11 PM
LEAK TEST REPORT

TANK NO. 1 8000 GAL UNLEADED REG

| | |
|---|---|
| THRESHOLD | 0.10 GAL/HR |
| TEST STARTED | 12:00 AM |
| LAST DELIVERY | 6:15 AM |
| LAST DELIVERY | 07/24/91 |
| BEGIN GROSS | 5903.8 GAL |
| BEGIN NET | 5869.2 GAL |
| BEGIN LEVEL | 66.311 IN |
| BEGIN TEMP | 68.334 F |
| BEGIN WATER | 6.5 GAL |
| BEGIN WATER | 0.58 IN |
| END TIME | 1:59 AM |
| END DATE | 07/25/90 |
| END GROSS | 5903.4 GAL |
| END NET | 5869.3 GAL |
| END LEVEL | 66.307 IN |
| END TEMP | 68.219 F |
| END WATER | 6.5 GAL |
| END WATER | 0.584 IN |
| LEAK RATE | 0.04 GAL/HR |
| TEST RESULTS | PASS |

# Leak Detection Mode

In the leak detection mode, the ATG system reports the integrity of the tank. No deliveries to the tank and no dispensing from the tank can occur while the system monitors changes in product level and temperature. Therefore, the tank must be taken out of service when the ATG is in the leak detect mode. Most ATG systems are simply programmed to automatically switch to the leak detect mode soon after the facility's closing time.

When the ATG is in the leak detect mode, level and temperature readings are taken automatically every 1 to 2 seconds and are averaged every 30 to 60 seconds. The level and temperature readings are sent to the microprocessor which converts these readings to temperature-compensated volume measurements. The microprocessor then analyzes the data and determines a rate that indicates how fast the product level is changing in the tank. This rate, expressed in gallons per hour (gph) must then be compared to a programmed value (threshold). If the absolute value of the temperature-compensated volume change exceeds the threshold, a leak is suspected (the test result is "fail"); otherwise, it is assumed that the tank is tight (the test result is "pass").

***IMPORTANT!*** ***There is always a minimum waiting time required between product delivery and the beginning of a leak test. This "minimum waiting time" allows tank deformation and product temperature to stabilize before testing. Some ATG models do not allow dispensing of product at the pump during all or part of this waiting time.***

# Inventory Mode

During the inventory mode (period of time when a leak test is not being conducted), the ATG monitors the level and temperature of the product in the tank. In addition to taking product level and temperature readings in the tank and converting them to volume measurements, some ATG systems measure and record the amount of product dispensed. For other ATG systems, the dispenser information may be recorded manually by on-site staff.

Product deliveries can also be recorded using the ATG system. Increases in volume in the tank that are above a minimum rate and volume are interpreted as a delivery. If the dispensing and delivery information are collected by the ATG system, the microprocessor could be programmed to automatically reconcile the inventory data at preset time intervals. However, most ATGs do not perform inventory reconciliation.

Inventory mode information is used to determine when to order fuel and to verify delivery of product to the proper tank. In the inventory mode, ATGs also monitor the amount of water in the tank. If the amount of water in the tank rises above a set value, a high-water alarm will be activated. High-water alarms should be investigated immediately. A possible breach in the tank wall (ingress of water into the tank) may have occurred. Even if the tank wall is intact, the alarm lets the operator know that the excess water should be removed.

# LEAK DETECTION AND REGULATORY REQUIREMENTS

## Leak Rates, Probabilities, and Leak Thresholds

Regulations require ATGs to perform monthly tests to detect leaks of at least 0.2 (gph), which is equivalent to approximately three cups every hour. In addition, regulations specify that these systems have a *probability of detection* of at least 95 percent and a *probability of false alarm* no greater than 5 percent.

The probability of detection describes the probability that a tank leaking at a given rate will be detected. For example, if the probability of detection is 95%, when 100 tanks leaking at 0.2 gph are tested, 95 tanks will be reported leaking. The probability of false alarm is the probability that a "tight" tank will be incorrectly reported as leaking. For example, if the probability of false alarm is 5%, when 100 tight tanks are tested, no more than 5 tanks will be reported as leaking.

***Due to the statistics involved in leak detection probability for a 0.2 gph test, the leak threshold is set at a value less than 0.2 gph (generally 0.1 gph).****

***If the absolute value of the calculated leak rate (determined by the ATG) is equal to or greater than the fixed leak threshold, then a leak is suspected and the test result is a "fail".***

*** Leak thresholds are generally set by the equipment manufacturer at about half the target leak rate. For a 0.1 gph test, the ATG would use a threshold of approximately 0.05 gph.***

# Leak Test Reports

An important feature of ATGs is that they provide a variety of leak detection and fuel management reports. Reports are either automatically printed from the console (or from a computer terminal) or can be obtained on demand by simply pressing a few buttons on the ATG console or the computer keyboard. These reports can be generated by ATGs:

| | |
|---|---|
| **Inventory Report:** | Tank inventory status information |
| **Delivery Report:** | The time and amount of last or previous deliveries to the tank |
| **Water level Report:** | The amount of water in the tank |
| **Set-up Report:** | Parameters programmed at the time of installation (coefficient of thermal expansion, leak thresholds, tank strapping information, tank tilt, etc.) |
| **Probe Status Report:** | Indicates any problems with the probe (probe missing) |
| **Leak Test Report:** | Results of leak tests |
| **Alarm Reports:** | Information on the existing alarm conditions |
| **History Reports:** | History of alarms, leak tests, or probe failures |

California regulations require that the following information be included in the leak test report:

- time and date of the test
- tank identification
- product depth
- water depth
- product temperature
- product volume
- test duration
- calculated leak rate in gph*
- leak threshold in gph*

***ATGs are required to generate a "hard copy" report containing specific information.***

***CCR 2643(b)(1)***

*Required if the system was installed on or after January 1, 1995.

Although not specifically stated in the regulations, printed test reports should clearly indicate a "pass" or "fail" result.

For some ATGs, the leak report may not include all the items required by the regulations even though that information is available from the system's diagnostics. In these cases, the ATG can be reprogrammed to print the required information on the leak report (this must be done by the manufacturer or authorized representative). If the required information is not included in the leak test report, but it is available from other reports, a simple solution is to print those other reports (i.e., inventory report) before and after a leak test and keep it with the leak test report.

***Any calculated change in product volume (gain or loss) equal to or greater than the "leak threshold" will result in a failed leak test if the system is programmed correctly.***

By printing a last-delivery or status report, or a delivery-history report, the operator can check for the highest product level during the month as well as the amount of quiet time (waiting time) before the start of the leak test. Most ATG systems abort a test or print other warning messages on the leak test report if there was not adequate wait time prior to the start of the leak test.

**ATG test reports and maintenance records must be made available to local implementing agency inspectors during inspections.**

***To pass a leak test, the absolute value of the calculated leak rate (gain or loss) must be LESS than the leak threshold.***

# Product Level Limitations

Automatic tank gauges test only the part of the tank that is filled with product. Therefore, a higher product level means more of the tank is tested.

The ability of the test to detect a specified minimum leak rate also depends on how much product is in the tank. A higher product level in the tank means more pressure is exerted (due to the hydrostatic pressure head) on a location of possible leakage. In other words, for the same size hole in a tank the leak rate will be higher when product level is raised. This leads to a better chance of detecting a specified minimum leak rate (0.2 gph or 0.1 gph) at high product levels.

As a result, the California regulations specify minimum product levels for monthly ATG tests. The following two options are allowed by the regulations:

***Hard copies of leak test reports serve to verify that tank owners are in compliance with leak detection requirements. The best way to save these reports is to put them in a binder along with any other reports printed by the ATG system.***

**OPTION 1 - Monthly 0.2 gph test** [Section 2643(b)(1) CCR]

With this option, the portion of the tank that routinely contains product must be tested every month. A tank owner may use an ATG to automatically perform 0.2 gph tests throughout the month. To be in compliance: a) one of the tests during the month must be done following a routine product delivery, after allowing for minimum waiting time without any dispensing; or,
b) one of the tests during the month must be done at a product level which is within 10 percent of the highest operating level during the previous 30 days.

***At least one leak test at (or above) the minimum required product level must be performed <u>each month</u>.***

Example [Using Option 1(b)]:
**Oct. 15:** 0.2 gph test performed at the <u>90-inch</u> product level.
**Oct. 16 to Nov. 15:** The highest operating level in the tank is <u>85 inches</u> full.
**Nov. 15:** 0.2 gph test must be performed at or above <u>76.5 inches of product</u>. 85 - (10% x 85) = 76.5 inches

Note: the previous month's test level does not have to be included in the highest operating level calculations.

Tank owners/operators should review the ATG test reports in the latter part of the monthly monitoring cycle. That way, if none of the tests for that period meet the requirement in this option, a test that does meet that criteria can be done before the end of the monthly monitoring cycle. This may mean scheduling a delivery in order to perform a leak test that meets the product level requirement.

### OPTION 2 - Monthly 0.1 gph test and inventory reconciliation [Section 2643(b)(2) CCR]

***Note: Not all ATGs are able to perform a 0.1 gph test.***

Regulations allow tank owners to do their monthly tests at lower product levels (minimum of 3 feet), if they account for the reduced product head by performing a more sensitive test (0.1 gph test) **and** perform manual inventory reconciliation. Inventory reconciliation is required to assess the integrity of the part of the tank which did not contain product when the ATG test was performed.

Use of Option 2 is advantageous to tank owners who cannot meet the product level requirement in Option 1. For 24-hour stations, this option may be more practical because it may require less down time during the waiting period. Product may be dispensed during all or part of the required waiting period (if allowed by the ATG manufacturer) as long as the level does not drop below the required level for a valid leak test.

This option has the disadvantage of requiring additional record keeping (manual inventory reconciliation) which is time consuming and prone to error. In addition, the 0.1 gph leak test may cause more false alarms than 0.2 gph tests. Use of Option 2 should be reserved for tanks where Option 1 is not practical and has an adverse economic impact.

A switch between Option 1 and 2 is considered a change in the monitoring program and requires notification to the local implementing agency.

***With the recent development of CATGs, tank owners that prefer to use ATG technology for monthly monitoring will generally be able to comply without extended tank down time or the concern for the minimum product level limitations.***

***(See page 22 for CATGs)***

# Recording and Reporting

## Leak Test Results

ATGs must complete a conclusive test that meets regulatory as well as equipment manufacturer's requirements (whichever is more stringent) at least once each month. The printed test results must be kept for at least three years.

***Monitoring records must be maintained for at least three years.***

***CCR 2712(b)***

## Failed Leak Tests

Failed leak tests must be documented along with the test report. Unless there is justification for a retest, the failed test is an indication of an unauthorized release and must be recorded and reported to local implementing agency. Possible justifying reasons* for a failed test on a tight tank include:

1. the test was started too soon after a delivery (tank conditions were not stable).
2. fuel was pumped during the test.
3. the ATG was improperly programmed.

*These conditions usually result in invalid, aborted, or inconclusive reports. Most of the ATG failed test results are true indication of a leak and must be seriously investigated.

***Any failed ATG leak test that cannot be readily discounted as an error must be reported to the local agency within 24 hours.***

***CCR 2650(e)(4) & 2652(b)***

# Calibration, Maintenance and Repair

When inventory records contain significant discrepancies, or the ATG is indicating equipment problems or showing failed or inconclusive results, a service person should be called immediately.

Most manufacturers claim that if their ATGs are properly installed and programmed they will signal an error message if the probe or its sensors are not functioning properly. However, regulations require equipment be checked at least annually to verify proper system operation. Some ATG manufacturers certify technicians to install, program, or perform maintenance work on their equipment.

During annual maintenance checks, any significant discrepancies in ATG measurements can be seen through dipstick measurements and/or reconciliation calculations. In addition, all alarms can be verified through established testing protocol, (i.e. induced leak tests). The installation parameters can also be checked by printing a set-up report. When the type of product stored in a tank changes or seasonal fuel additives are used, the ATG manufacturer or authorized representative must be contacted to determine if the initially programmed coefficient of thermal expansion needs to be changed.

***Owners and operators must keep records of annual service checks and any other maintenance performed on the ATG for at least five years.***

***CCR 2712(b)***

***A qualified maintenance person must check leak detection equipment annually.***

***CCR 2630(d) & 2641(j)***

Now that oxygenated fuels are being used, it is essential to check with the ATG manufacturer about the effect of alcohol and methyl tertiary butyl ether (MTBE) on the water-sensing capability of the ATG probe. A change in the system set-up parameters (water level alarms) may be needed. The addition of alcohol could, depending on the amount of alcohol blended into the fuel, change the "minimum water level" and "water level change" measurement capability of the sensor. This is due to the mixing and partitioning effect of water between the fuel and alcohol.

***Pressing the self-test button on the ATG systems that offer this function, does not qualify as an annual system check.***

The ATG manufacturer or distributor should be contacted to determine that the ATG probe components are compatible with alcohols and MTBE.

Capacitance probes do not function properly with oxygenated fuels and must be replaced with an ultrasonic, magnetostrictive or other approved probes.

***All UST monitoring equipment must be "installed, calibrated, operated and maintained in accordance with manufacturer's instructions, including routine maintenance and service checks (at least once per calendar year) for operating condition".***

***CCR 2630(d) and 2641(j) (added)***

# Leak Detection Equipment List

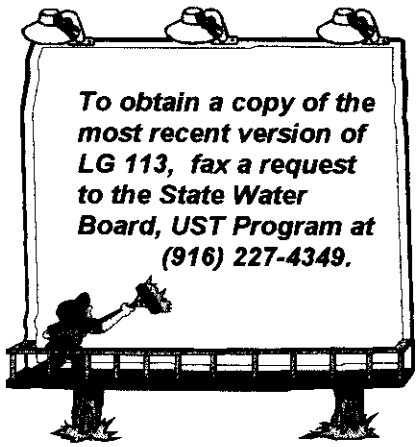


Monitoring systems that meet California's requirements are listed in a guidance document distributed to all local agencies and other interested parties. This document, LG 113, contains specifications for all leak detection equipment and test methods reviewed for use in California. The equipment listed has been tested by independent third-party evaluators and reviewed for compliance with state and federal requirements.

The reason the State Water Board publishes LG 113 is to eliminate the need for each local agency to independently review third-party evaluations. There are, however, some local agency regulators who do their own additional reviews. They may have more stringent requirements and may not allow the installation of some equipment listed in LG 113.

LG 113 specification sheets contain valuable equipment specific information such as:

- Leak threshold
- Product level range
- Waiting time between product delivery and start of leak test
- Data collection time (test period)
- Maximum allowable tank capacity
- Product type
- Water sensor detection limits

Failure to follow the specifications listed in LG 113 will result in an invalid test.

***ATGs may be used to monitor manifolded tanks only if: 1) a separate probe is installed in each tank, 2) the tanks are isolated before the test, and 3) time is allowed for product in the siphon bars to settle before the test is started.***

***The above requirements must be met unless an ATG is third-party certified and approved to test manifolded tanks without isolating them.***

# INSPECTING ATGs

## Inspection Checklist

Proper inspection of facilities using ATGs for monthly monitoring is very important. The compliance inspection should include:

- Verifying that use of the ATG is consistent with LG-113 specifications.
- Checking the operator's knowledge and familiarity with the system.
- Checking if equipment manuals are available (preferably on-site).
- Reviewing printed test reports and alarm histories.
- Verifying the validity of test results.
- Reviewing the history of water level measurements inside the tank and high-water alarms.
- Reviewing annual maintenance check records.

***Local agencies must inspect UST systems in their jurisdiction at least every three years.***

A sample **inspection checklist** is provided in Appendix B. This checklist may be used by inspectors to verify compliance or by tank owners/operators to perform a self audit.

## Annual Maintenance Checklist

To assist inspectors and tank owners with their review of annual maintenance records, **annual maintenance checklists** are provided in Appendices C1 and C2.

***Equipment calibration or routine maintenance along with periodic system tests must be performed by adequately trained, qualified personnel only.***

The checklists were compiled based on a review of manufacturer requirements. They contain lists of *minimum* procedures a service company or personnel should perform during the annual check. Service companies must follow manufacturers' instructions to perform the maintenance and specific calibration procedures. It is recommended that a copy of the checklist be attached to the report.

# ADVANCES IN ATG TECHNOLOGY

ATGs are continuing to evolve. Models are now available with tank probes directly connected to personal computers, eliminating the need for dedicated consoles to process data and communicate results. Accompanying software allows any computer to function as an ATG with vastly improved capabilities for graphic display of information, report generation, and printing.

There are also simplified consoles developed to serve as communication interfaces. With these devices, a remote computer can call up the communications box, download inventory information, and automatically produce management reports.

In their many forms, ATGs have the potential to improve the security and monitoring of petroleum storage systems, if properly installed, used, and maintained.

# Continuous Automatic Tank Gauges (CATGs)

Many service stations are open around the clock, and operators prefer not to shut down for ATG leak tests. Manufacturers responded to this concern by developing ATGs that collect data continuously in order to test the tank.

Known as continuous automatic tank gauge (CATG) systems, these devices are equipped with a software program to continuously collect product level and temperature data from the tank. This data is analyzed by the software program to select segments of data gathered when the tank is idle and stable. As soon as the system has gathered enough usable data, it will perform a leak test. This provides the ability to perform many leak tests, sometimes daily, during each month If the system is unable to accumulate enough acceptable data during a month, the tank must be taken out of service to collect additional data to perform a conclusive leak test. CATG systems can also be automatically or manually set to perform a standard ATG test (tank taken out of service while a leak test is in progress).

***Third-party certified CATGs will be reviewed and listed as "other test methods in LG 113."***

***CCR 2643(b)(5)***

ATG manufacturers market CATGs as upgraded versions of the conventional automatic tank gauges (generally they use the same probe, but a different microprocessor and analysis software). CATG systems have the challenge of accounting for product evaporation and condensation, tank deformation, variation in leak rate with product level, temperature variations, and frequent deliveries.

***The product level requirements and leak test reporting requirements for ATGs may not apply to CATGs.***

CATGs do not have a regulatory minimum product level requirement although there may be a product level limitation on the system set by the manufacturer or based on the third-party evaluation results. However, there is a maximum monthly throughput limit for the system. This limit is based on the data used during the third-party evaluation and performance of the system in the evaluation. CATGs can generally test larger tanks than ATGs and may be able to test manifolded tanks without an isolation valve.

To properly conduct a third-party evaluation of these innovative systems, a three-way effort among California SWRCB staff, manufacturers, and third-party evaluators resulted in the development of an acceptable evaluation protocol. On April 7, 1995, the evaluation protocol was completed by Midwest Research Institute (MRI)*. This protocol addresses the regulatory and technical issues important to the evaluation of CATGs. CATGs that have been evaluated under this protocol will be reviewed and included in LG 113.

* Evaluation Protocol for Continuous In-Tank Leak Detection Systems April 7, 1995, Midwest Research Institute.

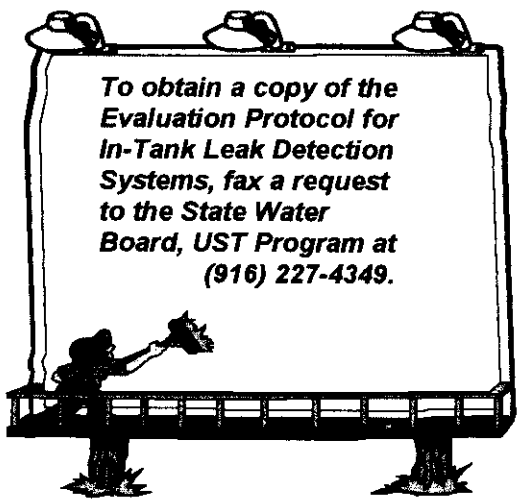

# ANSWERS TO COMMON QUESTIONS ABOUT ATGs

**1. What is the detectable leak rate for ATGs?**

Most ATGs are third-party certified to detect a 0.2 gph leak rate. Some systems have also been certified at a 0.1 gph leak rate.

To determine if an ATG was programmed at the time of installation to perform a 0.1 gph test, check the owner's manual, check test reports, consult the installation contractor, or print the system's set-up report.

---

**2. What information should be in the ATG leak test report?**

The hard-copy leak test report must include: time, date and duration of test, tank identification, fuel depth, water depth, temperature of the product, liquid volume, leak threshold*, and calculated leak rate*.

*Note that CATGs are not required to print all this information because all ATG requirements are not applicable to CATGs.*

* Required for systems installed after January 1, 1995.

---

**3. Can product be delivered to or dispensed from a tank while the ATG is in a leak test mode?**

No. The tank must be out of service during the test period. There is also a required waiting time between product delivery and the beginning of a leak test. The waiting times are listed on specification sheets in LG 113. Some manufacturers also recommend idle time between last dispensing and the start of a test (this information may be found in the owner's manual).

---

**4. How do you know if there was adequate waiting time before the test began?**

By comparing the test's start time (printed on the leak report) with the time of the last product delivery*. This calculated waiting time must be equal to or greater than the time period listed in LG 113. Most systems will generate an invalid test result or abort a test if the idle time was not adequate.

*The time of last delivery may either be printed on the test report, or may be obtained from the system's delivery or inventory report, or from delivery invoices.

---

**5. How do you know if product was dispensed during the test?**

By reviewing the leak test report (which includes beginning and ending product levels). If the report shows a significant change in product level during the test, but the result is reported as "pass," there is probably a malfunction or product has been added to or dispensed from the tank during the test. If product has been delivered or dispensed during the test and the ATG reports a "pass," the ATG may have been programmed as a CATG.

Most ATGs (if installed and programmed properly) automatically abort the test if there is any dispensing or delivery during the test. There may also be a "sudden loss" or "theft" message on the report.

---

**6. Can ATGs be used after December 22, 1998?**

Yes. ATGs may be used on upgraded, single-walled tanks.

ATGs can also be used for inventory management on double-walled tanks. However, for monitoring purposes, the ATG console must be connected to an interstitial sensor to continuously monitor the tank's annular space.

---

**7. Can an ATG be used as a stand-alone monitoring method for single-walled tanks?**

Yes, if all of the following conditions are met:

- The ATG is placed in the 0.2 gph leak test mode at least once per month.
- The product level is within 10% of the highest level within the previous 30 days, or the test is conducted following product delivery and appropriate waiting time (with no dispensing until completion of the test).
- The product is above the minimum level listed in LG 113 for the 0.2 gph leak test.

See Section 2643(b) CCR for more information.

---

**8. If the operator does not usually operate the tank at high product levels every month, can the tank still be monitored using an ATG?**

Yes, but not as a stand-alone method. A tank may be tested when product is as low as 36 inches if all of the following conditions are met:

- The ATG is put in the 0.1 gph leak test mode at least once per month.
- Monthly manual inventory reconciliation is done.
- The ATG is listed in LG 113 for the 0.1 gph standard.
- The product level during the test is above the minimum level listed in LG 113 for the 0.1 gph leak test. If the minimum product level listed in LG 113 for the specific ATG is too high, then use of the low-level testing option is not available to the tank operator.

See Section 2643(b) CCR for more information.

---

**9. Are there any inconsistencies between LG 113 specifications for ATGs and the UST regulations?**

No.

- Section 2643(b) CCR specifies the limitations and requirements for ATGs for monthly tank monitoring.
- LG 113 lists technical limitations of each ATG system based on the system's third-party evaluation.

The regulations allow monthly ATG leak tests at low product levels (as low as 36 inches) for the the tanks consistently operated at a low product level. However, the leak test must be performed at or above the minimum product level specified for that ATG by the manufacturer and verified through third-party certification. For example, if the product level limitation for an ATG system is between 50% and 95%, even if the tank usually operates at or below 30% capacity, the test must be performed at or above 50%.

---

**10. Could the information in LG 113 be different from third-party evaluation reports?**

Yes. Third-party evaluation reports are reviewed for accuracy and consistency. At times the data in the report does not support what the evaluator has included in the certification sheets. LG 113 reflects system specifications as reviewed and accepted by State Water Board, UST program staff. All equipment manufacturers receive copies of the specification sheets for their systems before the information goes into LG 113. Manufacturers who disagree with the information should contact program staff to discuss the issues and correct any errors.

---

**11. What were the requirements for ATGs before regulations were amended in 1994? Why were they amended?**

Before May 5, 1994, regulations required that ATGs be put in the test mode at least once every month after tank filling. This was interpreted by some local agency staff to mean that the tank had to be full. Other agencies thought this meant the test had to be performed after product delivery but not necessarily with a full tank.

Conducting a test on a full tank or after product delivery requires long waiting times for the tank deflection and product temperature to become stable. This posed a problem for 24-hour station owners who needed their tanks to be in service around the clock. The new regulations allow these tanks to be tested without extended waiting time.

---

**12. How do ATGs get on the LG 113 list of acceptable monitoring methods?**

ATGs are evaluated by independent testing companies that follow a standard test protocol approved by EPA. Manufacturers obtain this one-time "third-party" evaluation to demonstrate to the State Water Board that their systems are designed and programmed to meet established standards.

Manufacturers' evaluations of their own systems are not acceptable.

This evaluation differs from the annual equipment check which is sometimes referred to as "annual certification." The annual check is done on installed equipment to verify that the leak detection equipment is still functioning properly.

---

**13. In LG 113, the minimum product level listed for most ATGs is 50% for the 0.2 gph test or 95% for the 0.1 gph test. *Why?***

Standard third-party testing protocol requires evaluation tests to be conducted at 50% and 95% product levels. The protocol also requires the evaluator to determine if the performance of the equipment at 50% is comparable to its performance at 95%. If it is, the evaluator may then consider certifying the ATG for use at other levels. Most evaluators have listed the minimum product level of 50% as the ATG's operating limitation. In some cases, evaluators have included a footnote stating that "according to the manufacturer, the system can be used at lower levels" without substantiating the manufacturer's claim.

In most cases where evaluators listed very low product level limitations (as low as 10%), either the evaluator did not follow the standard protocol, or there were no calculations, statements, or tests justifying the low product level limitation. Therefore, LG 113 lists most ATGs with a minimum 50% product-level limitation for the 0.2 gph test.

For 0.1 gph leak tests, most ATGs are listed as performing at or above 95% product level. Most manufacturers have obtained third-party certification at the 0.1 gph leak detection standard, with the intent of qualifying the ATG for tightness tests. This may allow tank owners to use ATGs to perform a tank tightness test instead of contacting a licensed tank tester. Since ATGs test only the portion of the tank that contains product, the 0.1 gph tightness test certifications have been obtained with the 95% product level limitation.

**14. Why are ATGs not approved for use on tanks with product levels lower than 50%?**

ATGs test only the portion of the tank that contains product. If a tank is always tested at low levels, a leak from a point above the product level will remain undetected. Also, reduced product head at low product level makes detection of a leak more difficult. The presence of ground water outside the tank can further complicate the ability to detect a leak, and could mask a leak if the test is consistently conducted at low product levels.

---

**15. What should manufacturers do if they disagree with the minimum product-level specifications for their ATGs?**

Performance specifications in LG 113 will not be changed unless there is a specific request to do so by the manufacturer. The manufacturer should request a review and send all supporting documentation from the third-party evaluator to the State Water Board, UST Program, P.O. Box 944212, Sacramento, CA 94244-2120.

Specifications will only be changed after State Water Board staff have reviewed the documentation and determined that the equipment is capable of finding a leak when the product level is below the minimum 50% (or 95% for 0.1 gph leak tests) level. Generally, this will require that the evaluator perform minimum detectable leak rate calculations and determine the leak threshold value for testing at lower product levels.

---

**16. Do ATGs compensate for the presence of groundwater when conducting a leak test?**

No. ATGs cannot sense the presence of water outside the tank. They also cannot adjust product level to compensate for the inward pressure from the water outside the tank.

> *Note: ATGs are equipped with a water sensor that is continuously monitoring for the presence of water inside the tank. In addition, ATGs perform tests at least monthly (generally more frequently). It is unlikely that all leak tests will be performed at a level that will mask a leak. As a result, it is acceptable to use ATGs for monitoring tanks in high groundwater areas.*

---

**17. Can ATGs be used at new tank installations to satisfy the required post-installation tank test?**

Yes, if all of the following conditions are met:

- The local agency approves the use of the ATG for tightness testing.
- A double-walled tank is installed with dry interstitial space (not brine or liquid-filled interstitial space).
- The ATG is third-party certified and listed in LG 113 for performing a 0.1 gph test.
- The tank is filled to the overfill prevention device set point during the test. If testing of the entire tank is desired by the tank owner or required by the local agency, the ATG test must be supplemented with an ullage tank test. ATGs only test the portion of the tank that contains product during the test.
- The test is properly documented by printed test results.

---

# APPENDIX A

## *A TECHNICAL OVERVIEW OF ATG PROBES*

# A Technical Overview of ATG Probes

## Magnetostrictive Probe

The magnetostrictive probe uses *floats (equipped with sensors)* to measure fluid levels within the tank. Various floats have been designed to correspond to specific products of varying density, including water. A float can be used only with the product for which it was specifically designed, and caution should be taken with the use of fuel blends that have varying product density.

Magnets (sensors) are located at the top of each float, and holes in the center of the float allow it to be slipped onto a long *guide tube* (usually stainless-steel, brass or aluminum). The float can then slide freely up and down the guide tube to rest at the appropriate fluid level. (See Figure 1.)

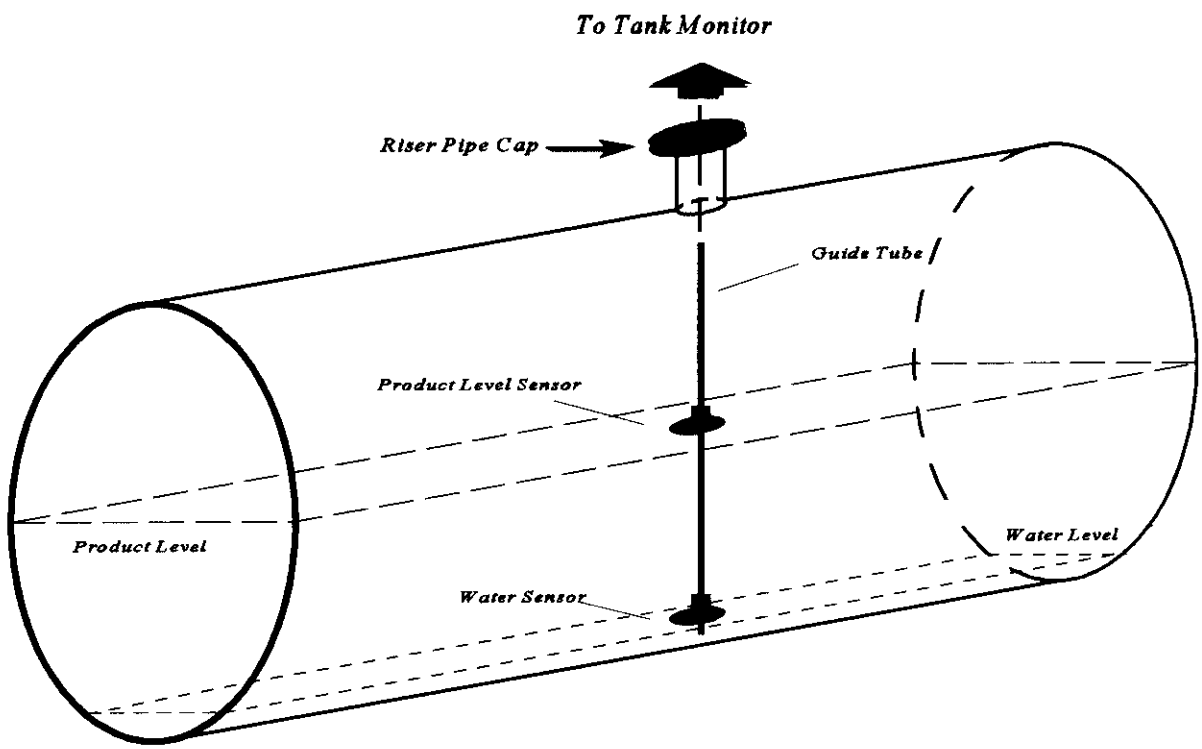


**MAGNETOSTRICTIVE PROBE**

Figure 1

Within the thin-walled guide tube is the internal nucleus of the probe (see Figure 2). Along the length of the guide tube, another tube constructed of a *"magnetostrictive" (magnetic restrictive) alloy* contains an insulated electrical wire. This insulated electrical wire is connected to a *transducer* at the top of the probe. The transducer emits an electronic pulse which creates a circumferential, current-induced magnetic field that is concentrated within the magnetostrictive tube.

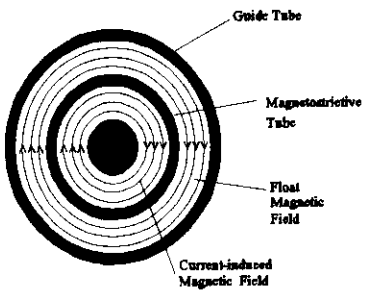


**Plan View**

Figure 2

At the product surface, the current-induced magnetic field interacts with the transverse field emitted from the magnets on the product float to generate a pulse on the magnetostrictive tube. This pulse propagates back up the probe to the transducer where the pulse is converted to electrical signals that are interpreted and sent to the tank monitor.

The product level measurement is based on the amount of time between the first transmitted pulse and the first return pulse; the water level is determined by the amount of time between the first transmitted pulse and the second return pulse.

Between the guide tube and the magnetostrictive tube, temperature sensors [often either resistance thermometers (*RTDs*) or thermistors] determine the product temperature. The temperature sensors are spaced unequally along the guide tube to survey the temperature of equal volumes of product.

**Determining Product Level**

**In simple terms, the product level is determined from the time required for an electronic pulse to travel from the top of the tank to the product float and back. The product volume is then calculated based on the product level and the known dimensions of the tank.**

# Ultrasonic Probe

This probe operates using sonic technology. Electric signals are sent to a transceiver affixed at the bottom of the probe. The tranceiver converts these signals to high frequency sound waves. These sound waves are transmitted upward from the transceiver at the tank bottom. Reference rings located at known distances and the product's surface reflect the sound waves downward back to the tranceiver. The ultrasonic waves are received by the transceiver and then converted back to electrical signals. A cable transfers the signals to the controller where they are amplified, and managed by a microprocessor and its associated software. The information from these reflections provide a correction factor for product density changes which occur with changes in temperature. In other words, the ultrasonic probe knows the absolute distance from the transceiver to the reference rings. Variations in the time of travel are used to calculate density from which temperature can be inferred. Product level is determined from the reflections from the product's surface. Water levels are monitored ultrasonically or with a small float.

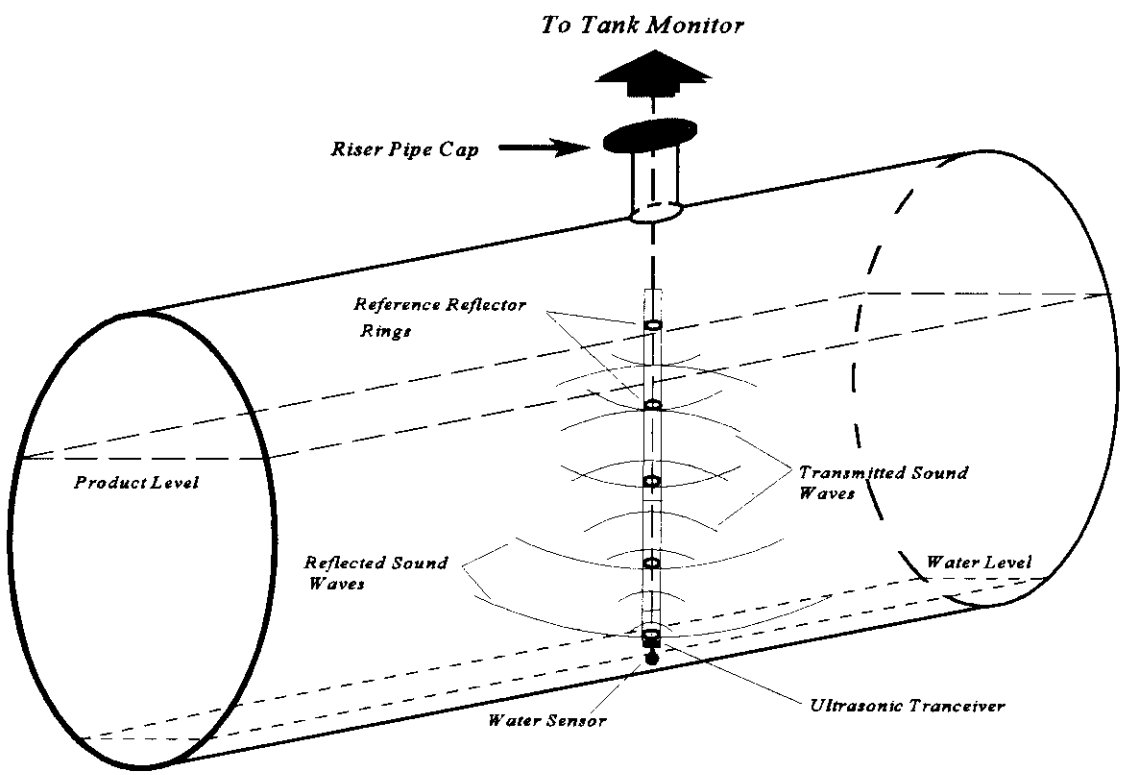


**ULTRASONIC PROBE**
Figure 3

# Mass Displacement (Buoyancy)

This glass probe is shaped to reflect a cross-sectional slice of the tank. Suspended in the tank by a sensitive scale, this probe monitors the weight of the probe in the tank. From the weight, the product level is determined based on buoyancy techniques and Archimedes' Principle.

Archimedes' Principle equates the (upward) buoyancy force of a submerged object with the gravitational (downward) force of the liquid displaced by the object. Stated another way, the more submerged an object is, the less it weighs.

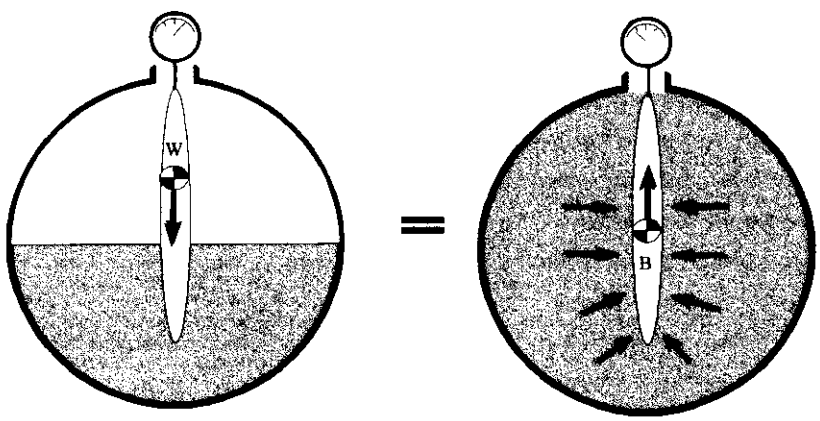


**GRAVITATIONAL FORCE of the weight of the probe (DOWNWARD)**

**BUOYANCY FORCE on the probe by the displaced fluid (UPWARD)**

Figure 4

Based on this concept, the product level in a tank can be determined from the weight of the partially-submerged mass displacement probe in relation to its "dry" weight. As the product level in the tank increases, more of the probe becomes submerged, and the "effective" weight of the probe (the weight the scale measures) decreases.

***Archimedes' Principle states that a body which is partially or entirely submerged in a fluid is "buoyed" up by a force equal in magnitude to the weight of the displaced fluid and directed upward along a line through the center of gravity of the displaced fluid.***

For example, when the tank is half full of product and the glass probe is half submerged, the weight of the probe measured by the scale will be about twice as much as when the tank is almost completely full and the probe is almost fully submerged. When properly calibrated, the weight of the probe is converted by the ATG software to a product level. The product level is then converted to product volume. In addition, the effects of temperature are already taken into account by changes in the density of the fluid. (The weight of the liquid displaced by the probe depends on the density which in turn depends on the liquid's temperature.)

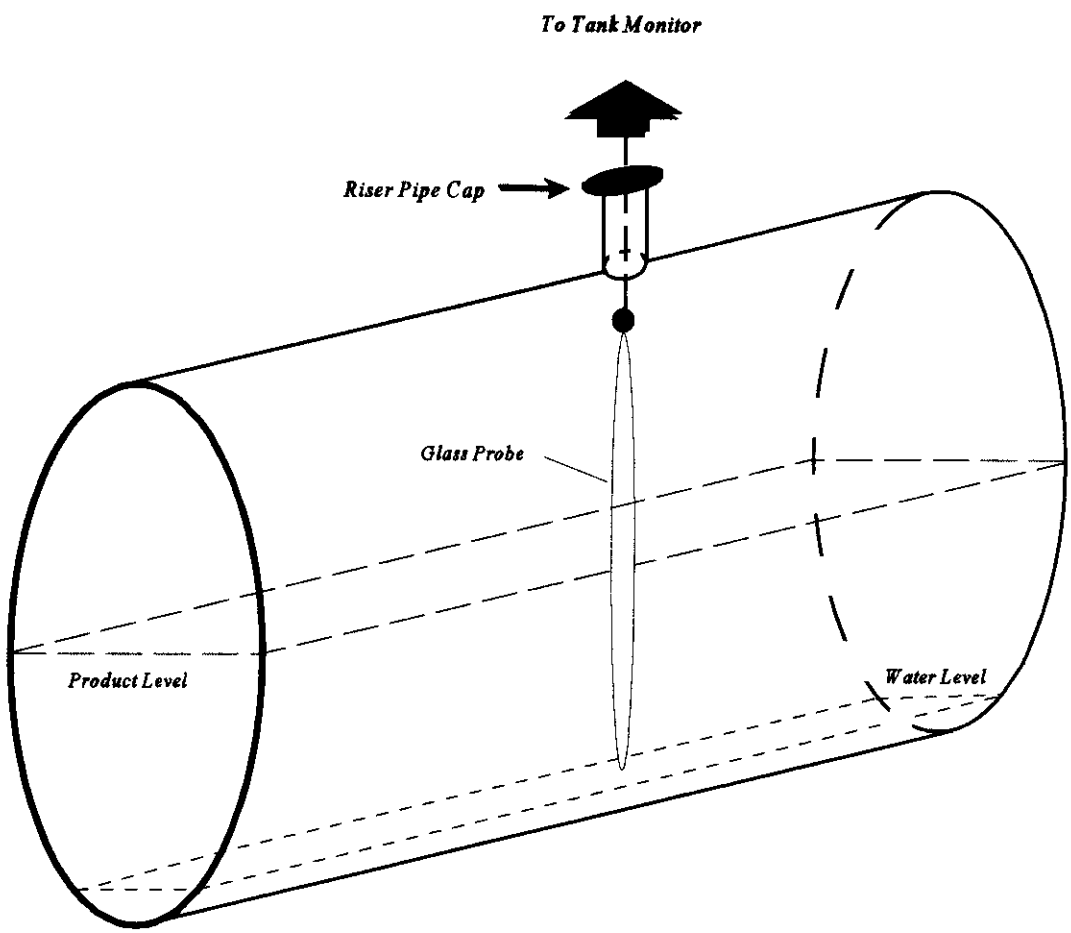


**MASS DISPLACEMENT PROBE**

Figure 5

# Capacitance Probe

Capacitance probes are no longer manufactured; however, some tank owners may still be using them.

This probe was designed on the principle that fuel products have different dielectric constants than air. A capacitor consists of two conductive tubes (commonly referred to as "plates" or electrodes) separated by a non-conducting material (an insulator). The two conductive tubes are separated by a glass tube and an air gap where the air can be displaced by product. As more air is displaced by product, the capacitance of the circuit changes linearly as a function of the product height. By knowing the circuit capacitance when no fuel is present and by calculating the expected capacitance when no air is present (using measurements from submerged sections of the probe below the product level), the product level is determined.

**Capacitance probes do not work properly with oxygenated fuel blends (such as M85 or gasohol), and should be replaced with a different type of probe.**

# APPENDIX B

## *ATG SYSTEM INSPECTION CHECKLIST*

Facility ID Number _____

# ATG SYSTEM INSPECTION CHECKLIST
## For Inspectors and Tank Owners

Manufacturer, name, and model number of the system: _____

| | | |
|---|---|---|
| Is the automatic tank gauging system listed in LG-113? | Yes ❑ | No ❑ |
| Is a probe present in each tank? | Yes ❑ | No ❑ |
| Is there an operation/maintenance manual available? | Yes ❑ | No ❑ |
| Are there any alarm lights flashing? | Yes ❑ | No ❑ |
| Does the system print hard copies of test reports? | Yes ❑ | No ❑ |
| Does the system's test reports include: tank identification? | Yes ❑ | No ❑ |
| time and date of the test? | Yes ❑ | No ❑ |
| product depth? | Yes ❑ | No ❑ |
| product volume? | Yes ❑ | No ❑ |
| water depth? | Yes ❑ | No ❑ |
| product temperature? | Yes ❑ | No ❑ |
| duration of the test? | Yes ❑ | No ❑ |
| calculated leak rate? (Required for systems installed after 1/1/95) | Yes ❑ | No ❑ |
| leak threshold? (Required for systems installed after 1/1/95) | Yes ❑ | No ❑ |
| test results (i.e., "PASS" or "FAIL")? | Yes ❑ | No ❑ |
| Does the leak threshold meet the specifications in LG-113? | Yes ❑ | No ❑ |
| Are the calculated leak rates (absolute value) less than the leak threshold? | Yes ❑ | No ❑ |
| Was each tank tested above the minimum allowable product level?[1] | Yes ❑ | No ❑ |
| Was each tank tested at least once every month? | Yes ❑ | No ❑ |
| Did waiting times between product delivery and testing meet the specifications in LG-113? | Yes ❑ | No ❑ |
| Did the test duration meet the specifications in LG-113? | Yes ❑ | No ❑ |
| Does the tank size meet the specifications in LG-113? | Yes ❑ | No ❑ |
| Is there documentation to show that failed tests were recorded and/or reported to the local agency? | Yes ❑ | No ❑ |
| Were high water alarms documented and investigated? | Yes ❑ | No ❑ |
| Is ground water present around the tank?[2] | Yes ❑ | No ❑ |
| Are monthly test records maintained for at least 3 years? | Yes ❑ | No ❑ |
| Is documentation available showing the system was installed, calibrated, and maintained in accordance with manufacturer's instructions, including routine maintenance and certification at least once per calendar year? [See Appendix C1 and C2 for the maintenance checklist] | Yes ❑ Date of Last Annual Certification: _____ | No ❑ |

Comments:

Inspector's Signature & Date:_____ Reinspection Date: _____

1. For the 0.2 gph test - Product level must be within 10 percent of the highest operating level from the last monthly test or the test must be performed following product delivery (without any dispensing after the delivery). The product level must never be less than the level listed in LG 113.

   For the 0.1 gph test - Product level must be at a level higher than three feet or above the level listed in LG 113, whichever is higher to monitor a tank using this option. Inventory reconciliation is also required, therefore, these records must also be checked for any discrepancies.

2. Presence of groundwater around the tank along with the presence of frequent high water levels in a tank may be an indication of a leak. Numerous incidents of water ingress could indicate a leak and should be monitored closely. If the operator is frequently removing excess amounts of water from a tank, there may be a hole in the tank. The presence of water in a tank could also be attributed to condensation or surface water access through the fill tube.

# APPENDIX C1

## *ATG ANNUAL MAINTENANCE CHECKLIST for MAGNETOSTRICTIVE AND ULTRASONIC PROBES*

# ATG ANNUAL MAINTENANCE CHECKLIST
## Magnetostrictive and Ultrasonic Probes

**Minimum procedures to be conducted by a *qualified service technician.***

| | | |
|---|---|---|
| Has all input wiring been inspected for proper entry and termination, including testing for ground faults? | Yes ❑ | No ❑ |
| Have the probe and sensors been checked for visible damage such as residue buildup, cracks, or breaks?[1,2] | Yes ❑ | No ❑ |
| Has the accuracy of the level sensor been tested? [3] | Yes ❑ | No ❑ |
| Has the accuracy of the water sensor been tested?[4] | Yes ❑ | No ❑ |
| Has the appropriateness of the high water level alarm setting been verified?[5] | Yes ❑ | No ❑ |
| Are all alarms activated and functioning properly? | Yes ❑ | No ❑ |
| Comments: | | |

1. Damaged probes must be cleaned or replaced as appropriate. Probes used in heavier products such as waste oil should be checked more frequently. Heavier products can leave deposits on the probe shaft and float assemblies that may restrict the measurement capacity of the probe.
2. Because the magnetostrictive probe consists of moving parts, its sensors can be damaged by excessive frictional wear as well as residue build-up. Residue build-up can affect the weight of the sensor as well as inhibit its ability to slide freely along the guide tube. Inaccuracies in the product level measurements could indicate a problem with the probe sensors. For additional testing of the probe sensors, perform the following test:
    a. Remove the probe from the tank and place it carefully on the ground.
    b. Place the water sensor flush with the bottom of the probe shaft and place the product float near the middle of the probe shaft.
    c. Check the height reading on the tank gauge monitor (after allowing sufficient time for the monitor to respond).
    d. Measure the distance from the bottom of the probe to the bottom of the product float and compare it with the reading on the monitor.
3. To test the accuracy of the product sensor:
    a. Using the tank console monitor, take an initial fuel level reading.
    b. Dispense one gallon of product into a calibrated container.
    c. Using the tank console monitor, take a second fuel level reading.
    d. Verify that the change in tank volume is one gallon.
4. To test the accuracy of the water sensor:
    a. Remove probe from the tank.
    b. By hand, move the water float up the probe to a point higher than the high-water alarm set point.
    c. The monitor should respond with a high water alarm report. (The water height may also appear on the tank monitor display console.
    d. Check this height against its actual location.
5. The high water level alarm should not be set so high that water ingress into the tank goes undetected for long periods of time.

***Disclaimer**: This checklist is not intended to tell the technician how to perform the maintenance and system check. Technicians should follow manufacturers' detailed instructions while making sure that all of the items on this checklist have been covered.*

# APPENDIX C2

## *ATG ANNUAL MAINTENANCE CHECKLIST for MASS BUOYANCY PROBES*

# ATG ANNUAL MAINTENANCE CHECKLIST

## Mass Buoyancy Probes

**Minimum procedures to be conducted by a *qualified service technician.***

| | | |
|---|---|---|
| Has all input wiring been inspected for proper entry and termination, including testing for ground faults? | Yes ❑ | No ❑ |
| Has the probe been checked for visible damage (such as residue buildup or cracks)? [1] | Yes ❑ | No ❑ |
| Has the battery been tested within the last 3 months? | Yes ❑ | No ❑ |
| Has the accuracy of the product sensor been tested? [2] | Yes ❑ | No ❑ |
| Has the accuracy of the water sensor been tested? [3] | Yes ❑ | No ❑ |
| Has the appropriateness of high-water level alarm setting been verified? [4] | Yes ❑ | No ❑ |
| Are all alarms activated and functioning properly? | Yes ❑ | No ❑ |
| Comments: | | |

1. Damaged probes must be cleaned or replaced, as appropriate. The mass displacement probe is very susceptible to dirt and residue build-up and should be checked semi-annually and cleaned, if necessary. Mass displacement probes used in viscous products such as waste oil should be checked more frequently. Products of this type can leave heavy deposits on the probe which may inhibit the accuracy of the probe. Checking a reconciliation report and/or manual sticking could verify the system's accuracy.

2. To test the accuracy of the product sensor:
   a. Using the tank console monitor, take an initial fuel level reading.
   b. Dispense one gallon of product into a calibrated container.
   c. Using the tank console monitor, take a second fuel level reading.
   d. Verify that the change in tank volume is one gallon.

3. To test the accuracy of the water sensor: (Note: water sensor is separator from the mass buoyancy probe.)
   a. Remove the probe from the tank.
   b. By hand, move the water float up the probe to a point higher than the high water limit.
   c. The monitor should respond with a high water alarm. (The water height may also appear on the tank monitor display console.)
   d. Check this height against its actual location.

4. The high water level alarm should not be set so high that water ingress into the tank goes undetected for long periods of time.

***Disclaimer**: This checklist is not intended to tell the technician how to perform the maintenance and system check. Technicians should follow manufacturer's detailed instructions while making sure that all of the items on this checklist have been covered.*

# APPENDIX D

## *TECHNICAL REPRESENTATIVES*

# TECHNICAL REPRESENTATIVES

Alert Technologies, Inc., Martin Kozi, Product Engineer, 3350 W. Salt Creek Lake, Suite 109, Arlington Heights, IL 60004, phone: (708) 392-0060, fax: (708) 392-0959.

Andover Controls, Inc., William Neville, Product Manager, 300 Brickstone Square, Andover, MA 01910, phone: (508) 470-0555 ext. 147, fax: (508) 470-0946.

API / Ronan, Mike Thornton, 21200 Oxnard Street, Woodland Hills, CA 91367, phone: (818) 883-5211, fax: (818) 992-6435.

Arizona Instruments, Allen Porter, National Sales Manager, 4114 East Wood Street, Phoenix, AZ 85040-1941, phone: (800) 528-7411, fax: (602) 470-1888

EBW, Inc., Alan Betts, Product Manager, 2814 McCracken Avenue, Muskegon, MI 49441, phone: (800) 475-5151, fax: (800) 475-4329.

Emco Wheaton, Inc., Harvey Shankle, Technical Product Manager, 114 MacKenan Drive, Cary, NC 27511, phone: (800) 342-6125, fax: (919) 460-7595.

Environment And Safety, Inc. (EASI), Alexander Jekat, 2077 O'Toole Avenue, San Jose, CA 95131, phone: (408) 954-9081, fax: (408) 954-9059.

Gilbarco, Inc., Jerry O'Hearn, Product Specialist, 7300 W. Friendly Avenue, Greensboro, NC 27420, phone: (919) 547-5965, fax: (919) 292-8871.

Incon Environmental, Inc., Paul Lukas, P.O. Box 638, Saco, ME 04072, phone: (800) 872-3455, fax: (207) 283-0156.

Marley Pump Co., Patrick S. Charlton, 30217 Stetson Drive, Coarsegold, CA 93614, phone: (209) 683-7647. fax: (209) 683-8793.

Omntec Electro Levels, Inc., Tom D'Alessandro, 1993 Pond Road, Ronkonkoma, NY 11779, phone: (516) 981-2001, fax: (516) 981-2007

Patriot Sensors and Controls Corporation, (formerly MagneTek), John Lindsey, Sales Manager, 1080 N. Crooks Blvd., Clawson, MI 48017-1097, phone: (313) 435-0700 ext. 188, fax: (313) 435-8120.

Tidel Engineering, Inc., Randy Carlton, Applications Engineer, 2615 East Belt Line Road, Carrollton, TX 75006, phone: (214) 416-8222 ext. 228, fax: (214) 416-8324.

Veeder-Root, Company, Jospeh P. McKuskie, Western Division Manager, 777 Campus Commons Road, Suite 200, Sacramento, CA 95825, phone: (916) 565-7428, fax: (916) 565-7429.

# APPENDIX E

## *REFERENCES*

# REFERENCES


Moreau, M., "Insight: What Every Tank Owner Should Know About Automatic Tank Gauges," Underground Storage Tank Guide (Vol. 1), Thompson Publishing Group, 1995.

California Underground Storage Tank Regulations, California State Water Resources Control Board, 1994.

"UST Inventory Control and Manual Tank Gauging Procedures and Forms", United States Environmental Protection Agency (EPA/908-B-93-001), 1993.

"Detecting Leaks," United States Environmental Protection Agency (EPA/503/UST-89/012), 1989.

"Evaluation Protocol for Continuous In-Tank Leak Detection Systems," Midwest Research Institute, April 7, 1995.

"A California Tank Owner's Guide for Upgrading Underground Storage Tanks," California State Water Resources Control Board, 1994.

"JUST UST NEWS," California State Water Resources Control Board, Summer 1995.